MARKER CODE				

STUDENT ENROLMENT NUMBER (SEN)									

TONGA FORM SIX CERTIFICATE 2024

DESIGN TECHNOLOGY

QUESTION AND ANSWER BOOKLET

Time allowed: 2 ½ Hours

INSTRUCTIONS:

1. Write your **Student Enrolment Number (SEN)** on the top right-hand corner of this page.
2. This paper consists of **FIVE MAJOR AREAS**. Each **AREA** is out of 70 weighted scores.
3. Answer **ONLY ONE MAJOR AREA. DO NOT** answer ALL THE MAJOR AREAS.

MAJOR AREAS		STRANDS	TOTAL SKILL LEVEL
	Please √ choice	**OPTIONAL QUESTIONS** Choose **ONLY ONE** (Major 1 – Major 5)	
1		**WOOD TECHNOLOGY**	**70**
2		**METAL TECHNOLOGY**	
3		**TECHNICAL GRAPHICS**	
4		**FOOD TECHNOLOGY**	
5		**TEXTILE AND GARMENT CONSTRUCTION**	
		TOTAL	**70**

4. Answer ALL QUESTIONS in your chosen **Major Area**. Write your answers in the spaces provided in this booklet.
5. Use a **BLUE** or **BLACK** ball point pen only for writing. Use a pencil for drawing if required.
6. If you need more space for answers, ask the supervisor for extra paper. Write your **Student Enrolment Number (SEN)** on each additional sheet, number the questions clearly and insert them in the appropriate places in this booklet.
7. Check that this booklet contain pages 2-63 in the correct order and that none of the pages is blank.

YOU MUST HAND IN THIS BOOKLET TO THE SUPERVISOR BEFORE YOU LEAVE THE EXAMINATION ROOM.

MAJOR AREA 1: WOOD TECHNOLOGY

SECTION A: MATERIALS

MULTIPLE CHOICE

Circle the letter of the **BEST** answer.

1. Identify which of the following is of a softwood species.
   A. Oak
   B. Maple
   C. Pine
   D. Mahogany

Skill level 1	
1	
0	
NR	

2. Hardwood is primarily derived from:
   A. Fir
   B. Maple
   C. Walnut
   D. Cherry

Skill level 1	
1	
0	
NR	

3. Hardwood generally
   A. is more expensive than softwood
   B. is less durable than softwood
   C. is more resistant to decay than softwood
   D. has a lower density than softwood

Skill level 1	
1	
0	
NR	

4. The best type of hardwood for a student to produce a wooden spoon is:
   A. Oak
   B. Maple
   C. Walnut
   D. Mahogany

Skill level 1	
1	
0	
NR	

5. Identify the type of particle board that is generally considered as more durable, fire-resistant, and termite-resistant.
   A. Medium-density fiberboard (MDF)
   B. Oriented strand board (OSB)
   C. Cement-bonded particle board (CBPB)
   D. High-density fiberboard (HDF)

Skill level 1	
1	
0	
NR	

6. State why some aircraft components are made of plywood.
   A. Plywood is extremely lightweight and strong.
   B. Plywood is highly resistant to corrosion.
   C. Plywood is easily shaped and molded
   D. Plywood is a natural material that is environmentally friendly

Skill level 1	
1	
0	
NR	

SHORT AND LONG ANSWERS

1. Describe **TWO (2)** uses of marine plywood.

Skill level 2	
2	
1	
0	
NR	

2. Describe some common finishes used on hardwood.

Skill level 2	
2	
1	
0	
NR	

3. Outline the purpose of grading timber.

Skill level 2	
2	
1	
0	
NR	

4. Discuss the primary difference between hardwood and softwoods.

Skill level 3	
3	
2	
1	
0	
NR	

5. Explain the difference between green timber and seasoned timber.

Skill level 3	
3	
2	
1	
0	
NR	

6. Discuss some common defects found in softwood, and how they affect its quality and use.

Skill level 3	
3	
2	
1	
0	
NR	

7. Discuss the disadvantages of kiln seasoning.

Skill level 4	
4	
3	
2	
1	
0	
NR	

SECTION B: TOOLS

MULTIPLE CHOICE

Circle the letter of the **BEST** answer.

1. State the correct name for the hand tool given below.
   A. Sliding bevel
   B. Straight edge
   C. Marking gauge
   D. Smoothing plane

Skill level 1	
1	
0	
NR	

2. From the following images, identify the plane that is most likely a rabbet plane.

A.

C.

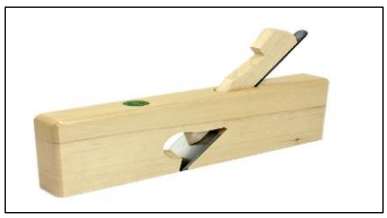

B.

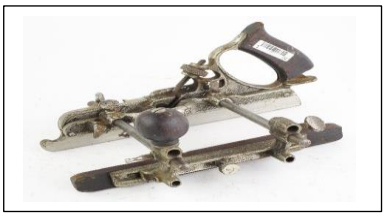

D.

Skill level 1	
1	
0	
NR	

3. Power tools:
   A. operates with an electric motor
   B. operates manually used by hand
   C. are used for laying out
   D. operates with fire

Skill level 1	
1	
0	
NR	

4. Identify which of the given tools is not a hand tool:

A.

C.

B.

D.

Skill level 1	
1	
0	
NR	

5. State the name of the part with label **A** from the hand tool shown below:
   A. Shock washer
   B. handle
   C. beveled edge
   D. tang

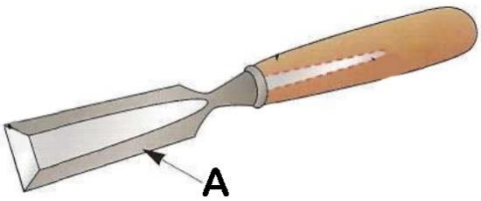

Skill level 1	
1	
0	
NR	

6. State the nature of wood fasteners that are often used to reinforce joints in furniture and cabinetry.
   A. They last long.
   B. They provide a stronger joint.
   C. They can be easily removed and replaced.
   D. They can be removed by a claw hammer.

Skill level 1	
1	
0	
NR	

SHORT AND LONG ANSWERS

1. Describe the function of a clamp.

_____

_____

_____

_____

_____

_____

Skill level 2	
2	
1	
0	
NR	

2. Describe the primary difference between a mitre joint and a butt joint.

_____

_____

_____

_____

_____

_____

Skill level 2	
2	
1	
0	
NR	

3. Discuss the importance of proper tool storage in a workshop.

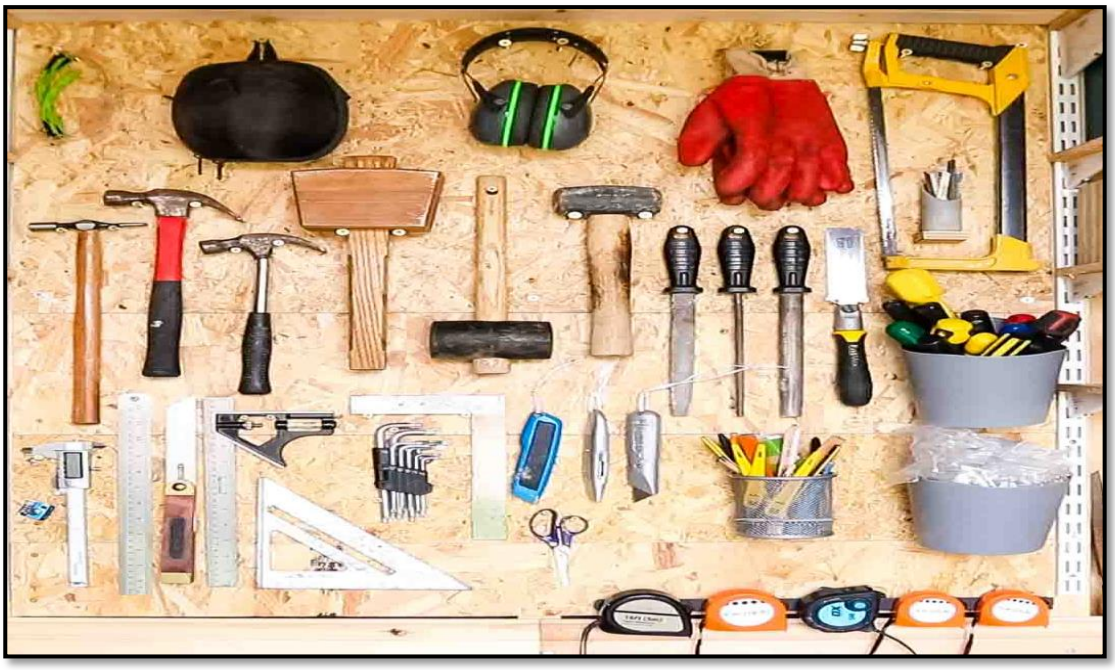

   i. Tool longevity

_____

_____

_____

ii. Safety

_____

_____

_____

Skill level 3	
3	
2	
1	
0	
NR	

iii. Efficiency:

_____

_____

_____

4. Clearly explain why dovetail joints is the best for drawer joint are.

_____

_____

_____

_____

_____

_____

_____

_____

_____

_____

_____

_____

Skill level 3	
3	
2	
1	
0	
NR	

5. Discuss the initial three steps involved in preparing a rough-sawn piece of timber for woodworking.

i. Face side:

_____

_____

_____

ii. Face edge:

_____

_____

_____

iii. Width:

_____

_____

_____

Skill level 3	
3	
2	
1	
0	
NR	

6. Explain how understanding the principles of tool design can improve a woodworker's efficiency and accuracy.

_____

_____

_____

_____

_____

_____

_____

_____

_____

_____

_____

_____

_____

_____

_____

_____

_____

_____

_____

_____

Skill level 4	
4	
3	
2	
1	
0	
NR	

7. Explain the safety considerations associated with using power tools in a school workshop.

Skill level 4	
4	
3	
2	
1	
0	
NR	

SECTION C: DESIGNING

MULTIPLE CHOICE

Circle the letter of the **BEST** answer.

1. State which of the following is not a wood fastener.
   A. Glue
   B. Screw
   C. Sealer
   D. Nails

Skill level 1	
1	
0	
NR	

2. State the primary purpose of varnish.
   A. To enhance the natural color of wood
   B. To provide a protective coating against scratches and stains
   C. To fill in pores and gaps in the wood surface
   D. To provide a smooth surface for finishing

Skill level 1	
1	
0	
NR	

3. State the first step in investigating a wood problem.
   A. Identify the cause
   B. Gather information
   C. Develop a solution
   D. Evaluate the solution

Skill level 1	
1	
0	
NR	

4. Give the primary purpose of a design brief.
   A. To provide instructions for building a project
   B. To define the scope and objectives of a design project
   C. To evaluate the success of a design project
   D. To document the design process

Skill level 1	
1	
0	
NR	

SHORT AND LONG ANSWERS

1. Describe **ONE (1)** key significance of the evaluation stage in the design brief process.

_____
_____
_____
_____
_____

Skill level 2	
2	
1	
0	
NR	

2. Discuss the research and investigation methods you employed for your independent woodworking project.

_____
_____
_____
_____
_____
_____
_____
_____
_____

Skill level 3	
3	
2	
1	
0	
NR	

3. During the design phase of your project, explain how you arrived at your optimal solution.

Skill level 3	
3	
2	
1	
0	
NR	

4. While constructing your project, discuss the strategies you employed to address any challenges or obstacles that arose.

Skill level 3	
3	
2	
1	
0	
NR	

5. Discuss why it is crucial to reference and analyze previous stages of the design process when working on a project.

_____

_____

_____

_____

_____

_____

_____

_____

_____

_____

_____

_____

_____

_____

Skill level 3	
3	
2	
1	
0	
NR	

MAJOR AREA 2: METAL TECHNOLOGY

SECTION A: MULTIPLE CHOICE

Circle the letter of the **BEST** answer.

1. When using power tools in a workshop, identify the most important safety measure to follow.
   A. Wear comfortable clothing.
   B. Use the tool for its intended purpose.
   C. Listen to loud music to stay focused.
   D. Work alone to avoid distractions.

Skill level 1	
1	
0	
NR	

2. Identify the tool that is essential for holding hot metal during the forging process.
   A. Anvil
   B. Hammer
   C. Tongs
   D. Vise

Skill level 1	
1	
0	
NR	

3. Non-ferrous metals are often used in electrical applications due to their:
   A. high strength
   B. magnetic properties
   C. low melting point
   D. good electrical conductivity

Skill level 1	
1	
0	
NR	

4. The ability of metal to be drawn down into wires is known as:
   A. Ductility
   B. Malleability
   C. Hardness
   D. Tenacity

Skill level 1	
1	
0	
NR	

5. The primary classification of metals is based on their:
   A. Colour
   B. Density
   C. Iron content
   D. Melting point

Skill level 1	
1	
0	
NR	

6. State which of the following is a common safety precaution when using an anvil.
   A. Avoid striking the anvil directly with a hammer
   B. Used a hammer that is too heavy for the work
   C. Work alone without supervision
   D. Ignore any warning signs or safety instructions

Skill level 1	
1	
0	
NR	

7. When storing tools in a workshop, it is important to:
   A. Leave them everywhere for easy access
   B. Store them in a way that prevents damage
   C. Leave them out on the workbench for convenience
   D. Store them so they are difficult to find

Skill level 1	
1	
0	
NR	

8. To prevent fires in the workshop, it is important to:
   A. Store flammable materials outside
   B. Properly dispose of oily rags
   C. Leave electrical cords plugged in when not in use
   D. Ignore safety signs and warnings

Skill level 1	
1	
0	
NR	

9. State the primary purpose of an investigation.
   A. To make decisions
   B. To gather information
   C. To provide entertainment
   D. To solve a problem

Skill level 1	
1	
0	
NR	

10. Identify which of the following statements is incorrect regarding the properties of metals.
   A. Metals are good conductors of heat and electricity.
   B. Metals are generally malleable and ductile.
   C. Metals are usually brittle.
   D. Metals have a metallic luster.

Skill level 1	
1	
0	
NR	

SHORT AND LONG ANSWERS

1. Name a crucial tool for starting a forging project.

_____

_____

_____

Skill level 1	
1	
0	
NR	

2. In the process of igniting an oxy-acetylene torch, state which gas should you initially activate.

_____

_____

_____

Skill level 1	
1	
0	
NR	

3. Identify the distinction between drawing down and upsetting metal.

_____

_____

_____

Skill level 1	
1	
0	
NR	

4. Outline **TWO (2)** safety rules that should be adhered to when operating machinery.

_____

_____

_____

_____

_____

_____

Skill level 2	
2	
1	
0	
NR	

5. Describe **TWO (2)** benefits of organized material storage in a workshop.

_____

_____

_____

_____

_____

_____

Skill level 2	
2	
1	
0	
NR	

6. Describe the **TWO (2)** characteristics of metals that are suited for making pots and pans.

_____

_____

_____

_____

_____

_____

Skill level 2	
2	
1	
0	
NR	

7. Explain the uses of the tools given in the table below.

	TOOLS	USES
A	Divider	
B	Angle grinder	
C	Tin snip	

Skill level 3	
3	
2	
1	
0	
NR	

Skill level 3	
3	
2	
1	
0	
NR	

Skill level 3	
3	
2	
1	
0	
NR	

8. Explain the correct welding procedures when working with an arc welder.

Skill level 3	
3	
2	
1	
0	
NR	

9. Discuss the **THREE (3)** essential precautions to apply when working with oxy-acetylene.

Skill level 3	
3	
2	
1	
0	
NR	

10. Explain **FOUR (4)** of the purposes of applying coatings or treatments to metal.

Skill level 4	
4	
3	
2	
1	
0	
NR	

11. Discuss the **FOUR (4)** main techniques used in metal fabrication.

Skill level 4	
4	
3	
2	
1	
0	
NR	

12. Explain **FOUR (4)** of the benefits of grouping metals into different categories.

Skill level 4	
4	
3	
2	
1	
0	
NR	

SECTION B: DESIGNING

Skill level 1	
1	
0	
NR	

1. Give the definitions of the following terms in design.
   a. Problem:

   _____

   _____

Skill level 1	
1	
0	
NR	

   b. Investigating:

   _____

   _____

2. Complete the table by naming the missing design stages.

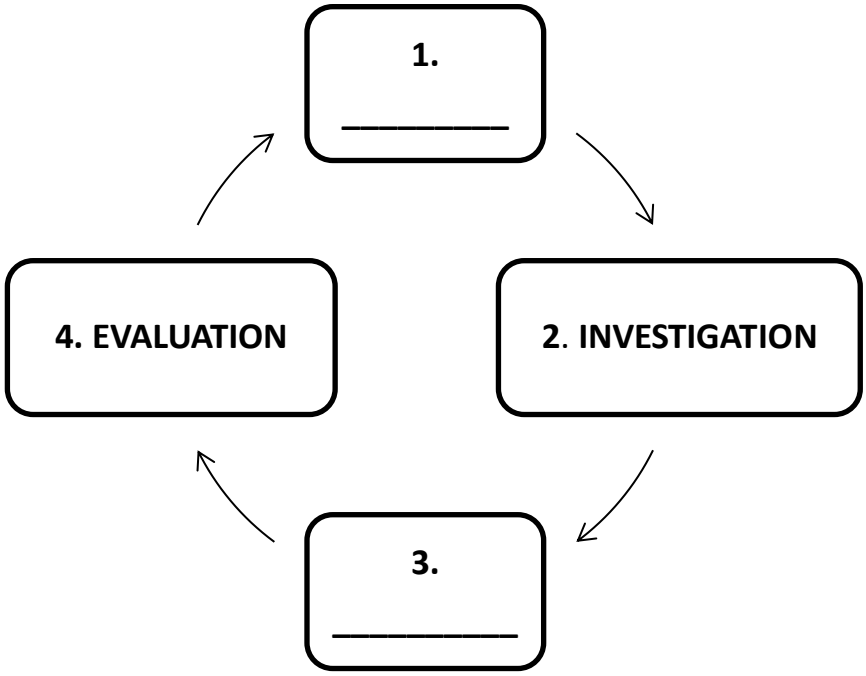

Skill level 1	
1	
0	
NR	

3. Outline the **TWO (2)** key goals of the evaluation phase in a design brief.

   _____

   _____

   _____

   _____

   _____

   _____

Skill level 2	
2	
1	
0	
NR	

4. Describe the **TWO (2)** research methodologies you applied in your independent project.

   _____

   _____

   _____

   _____

   _____

   _____

Skill level 2	
2	
1	
0	
NR	

5. Outline the significance of a 'two-way process' in design

Skill level 2	
2	
1	
0	
NR	

6. Discuss the steps taken to investigate the problem for your independent work

Skill level 3	
3	
2	
1	
0	
NR	

7. Discuss the process you used to develop the optimal solution for your project.

Skill level 3	
3	
2	
1	
0	
NR	

8. Discuss any difficulties that arose during the construction of your project and how you resolved them.

Skill level 3	
3	
2	
1	
0	
NR	

9. Evaluate the success of your Internal Assessment project.

Hint: *i. Did it meet the intended objectives?*
ii. How well did it function?
iii. What changes could be made to enhance its performance?

Skill level 3	
3	
2	
1	
0	
NR	

10. Discuss the benefits of keeping your tools and equipment in good condition for your project.

Skill level 3	
3	
2	
1	
0	
NR	

MAJOR AREA 3: TECHNICAL GRAPHICS

SECTION A: MULTIPLE CHOICE

Circle the letter of the **BEST** answer.

1. A book is resting on a table. Identify the forces acting on the book.
   A. Gravity and normal force
   B. Gravity only
   C. Normal force only
   D. Gravity and friction

Skill level 1	
1	
0	
NR	

2. State which of the following is NOT a type of pictorial drawing.
   A. Isometric
   B. Oblique
   C. Orthographic
   D. Perspective

Skill level 1	
1	
0	
NR	

3. State the most commonly used type of lettering for technical drawings:
   A. Roman
   B. Gothic
   C. Cursive
   D. Script

Skill level 1	
1	
0	
NR	

4. State the total surface area of the rectangular prism

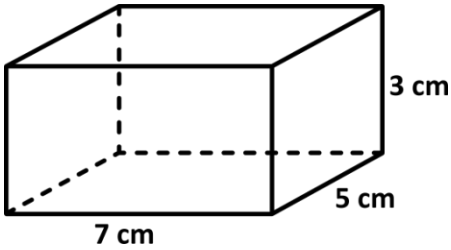

   A. 105 cm²
   B. 142 cm²
   C. 15 cm²
   D. 35 cm²

Skill level 1	
1	
0	
NR	

5. Identify the symbol for diameter.
   A. Δ
   B. Ø
   C. Ω
   D. #

Skill level 1	
1	
0	
NR	

6. The symbol used to indicate a hidden line in a technical drawing is:
   A. _____ _ _____ _ _____ _ _____
   B. ____ _ _ ____ _ _ ____ _ _ ____
   C. _ _ _ _ _ _ _ _ _ _ _ _ _ _ _ _ _ _
   D. _____

Skill level 1	
1	
0	
NR	

7. During the producing stage of a technical drawing project, state the primary focus.
   A. Researching and gathering information.
   B. Planning and outlining the drawing.
   C. Creating and finalizing the drawing.
   D. Reviewing and revising the drawing.

Skill level 1	
1	
0	
NR	

8. The line of intersection between a sphere and a plane is always:
   A. A circle
   B. An ellipse
   C. A parabola
   D. A hyperbola

Skill level 1	
1	
0	
NR	

9. State which of the following lines is used to represent hidden edges in a technical drawing.
   A. Center line
   B. Dimension line
   C. Hidden line
   D. Section line

Skill level 1	
1	
0	
NR	

10. Identify which of the following symbols is commonly used to represent a triangle in technical drawings.
   A. Δ
   B. Ø
   C. Ş
   D. #

Skill level 1	
1	
0	
NR	

SECTION B: SHORT AND LONG ANSWERS

1. Draw a chain line

Skill level 1	
1	
0	
NR	

2. State the total height of the cutter holder given.

_____

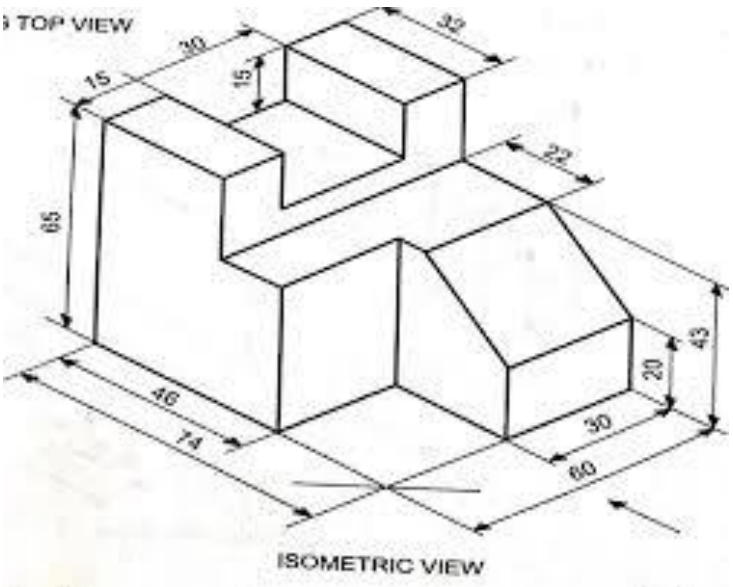

Skill level 1	
1	
0	
NR	

3. State the projection that this drawing symbol show.

Skill level 1	
1	
0	
NR	

4. Complete the table by describing what type of load and give an example of each.

LOAD	TYPE OF LOAD	EXAMPLE
Wind loads		
Dead loads		

Skill level 2	
2	
1	
0	
NR	

5. Use the drawing instrument to bisect the angle given.

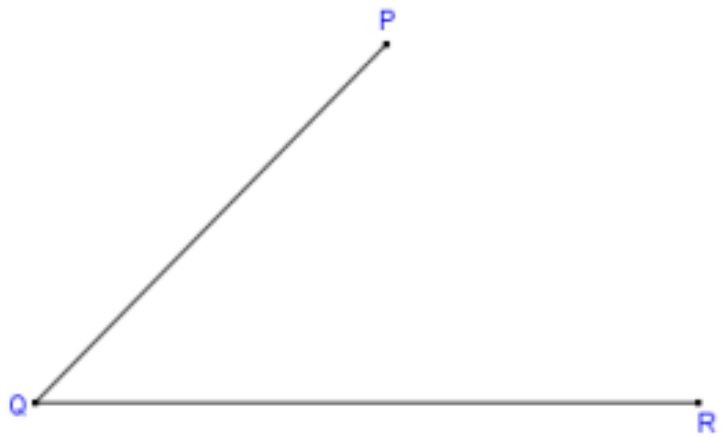

Skill level 2	
2	
1	
0	
NR	

6. Complete the missing lines on the orthographic drawing.

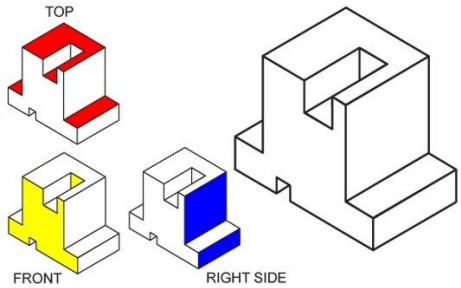

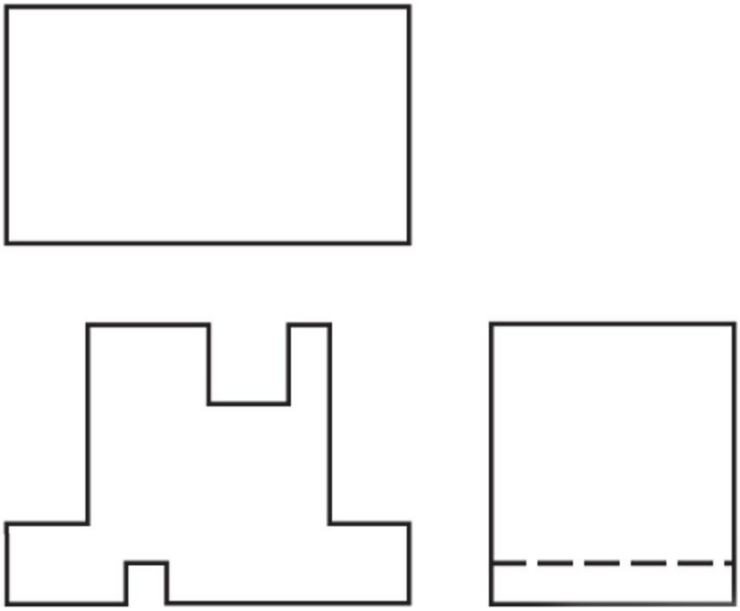

Skill level 2	
2	
1	
0	
NR	

7. A square pyramid with a base edge of 30mm and a height of 60mm rests on one of its base edges on the horizontal plane. The axis of the pyramid is inclined at an angle of 40° to the horizontal plane. Draw the projections of the pyramid, tilting it to the right side.

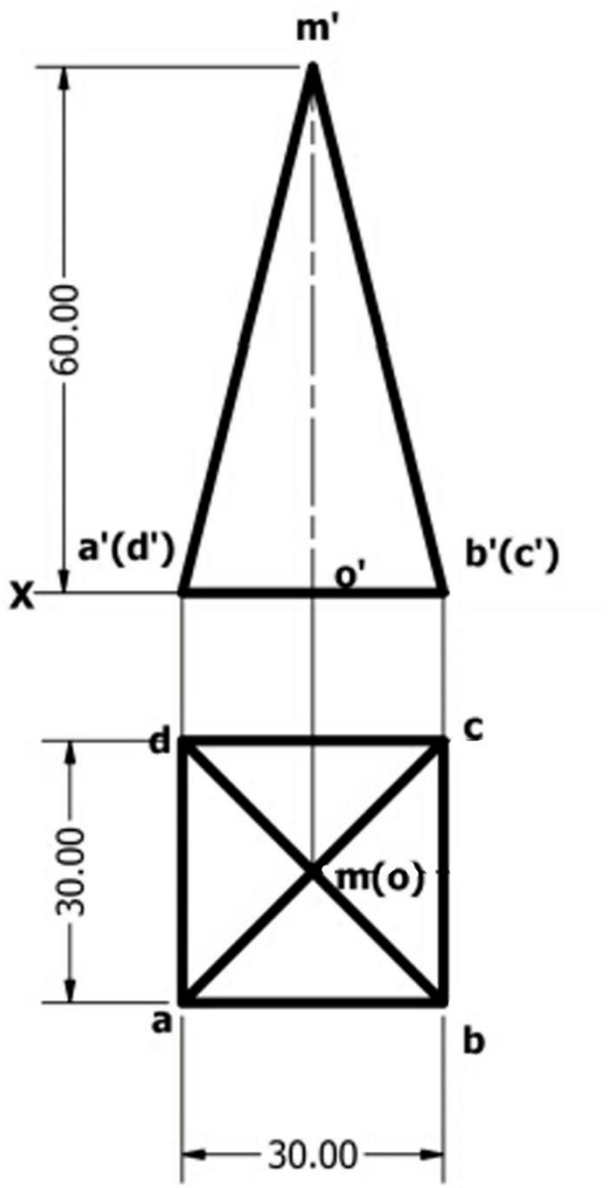

Skill level 3	
3	
2	
1	
0	
NR	

8. A cylinder with a diameter of 50mm and an axis length of 70mm is completely penetrated by a square prism with 25mm side lengths and an axis length of 70mm. The axes of the cylinder and prism intersect and bisect each other horizontally. All faces of the prism are equally inclined to the horizontal plane (HP).
Draw projections showing curves of intersections.

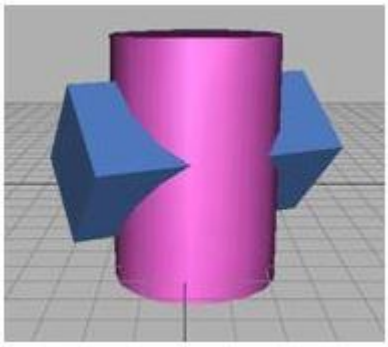

Skill level 3	
3	
2	
1	
0	
NR	

9. Create orthographic views of the given isometric projection drawing. All measurements are in millimeters.

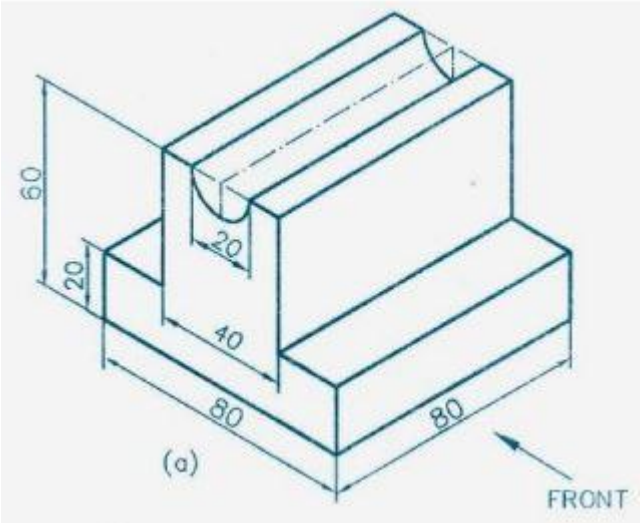

Skill level 3	
3	
2	
1	
0	
NR	

10. Using drawing instruments, complete the top view and create the development of the truncated rectangular pyramid.

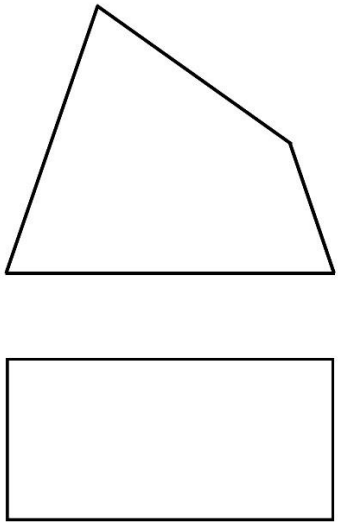

Skill level 3	
3	
2	
1	
0	
NR	

11. The projections of triangle ABC onto the horizontal and vertical planes are given below. Determine the true shape of triangle ABC and its true angle of inclination using any method you prefer.

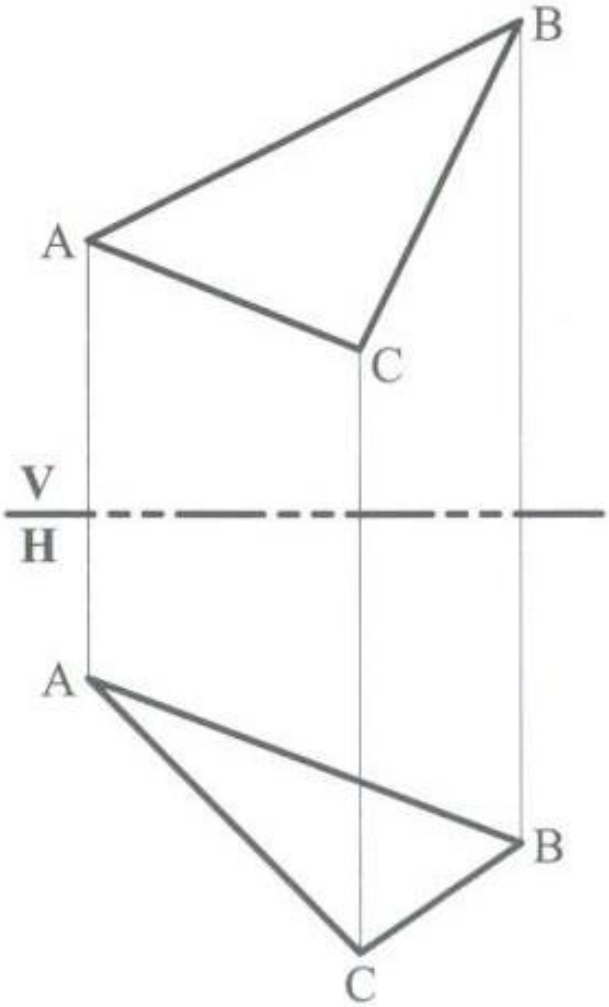

Skill level 3	
3	
2	
1	
0	
NR	

12. Given a single blade of a ship propeller, redraw the blade to a scale of 1:1, ensuring all measurements are in millimeters. Provide a clear and detailed drawing, including dimensions and labels as necessary.

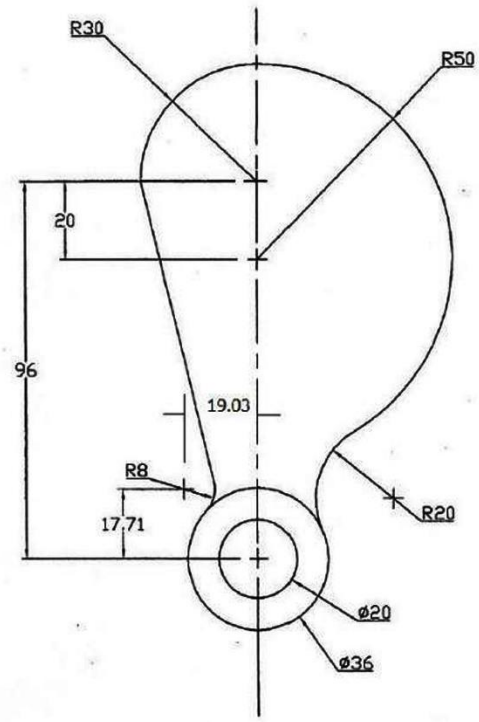

Skill level 4	
4	
3	
2	
1	
0	
NR	

SECTION C: DESIGNING

Skill level 1	
1	
0	
NR	

1. Define the following terms.
   a. Design brief:

   _____

   _____

Skill level 1	
1	
0	
NR	

   b. Investigating:

   _____

   _____

2. Complete the table by naming the missing design stages.

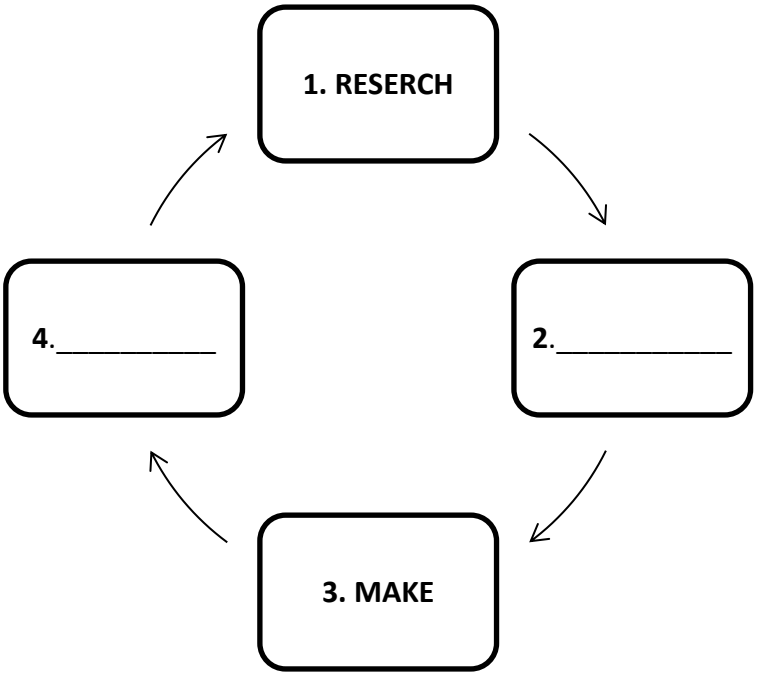

Skill level 1	
1	
0	
NR	

3. Outline **TWO (2)** importance of the evaluation stage of design brief.

   _____

   _____

   _____

   _____

   _____

   _____

Skill level 2	
2	
1	
0	
NR	

4. Describe **TWO (2)** of the methods you used for investigation for your independent project this year.

   _____

   _____

   _____

   _____

   _____

   _____

Skill level 2	
2	
1	
0	
NR	

5. Outline how a "two-way process" contributes to effective design.

Skill level 2	
2	
1	
0	
NR	

6. Discuss your research process for this year's independent project.
Provide details on how you conducted your research, including:
Research methods: Identify the methods you used (e.g., literature review, interviews, surveys, experiments).

Skill level 3	
3	
2	
1	
0	
NR	

7. Explain how you arrived at your most effective solution in the design phase of your project.

Skill level 3	
3	
2	
1	
0	
NR	

8. Discuss the challenges you encountered during the production phase of your project and how you successfully addressed them.

Skill level 3	
3	
2	
1	
0	
NR	

9. Discuss the results of your project as presented in your Internal Assessment (IA).

Hint: *i. Did the outcome align with the design brief?*
ii. How effective was the final product?
iii. What areas could be improved upon?

Skill level 3	
3	
2	
1	
0	
NR	

10. Explain why it is crucial to revisit previous phases of the design process when building or creating your project.

_____

_____

_____

_____

_____

_____

_____

_____

_____

_____

_____

_____

Skill level 3	
3	
2	
1	
0	
NR	

11. Draw the orthographic views of the given object. Dimensions are in millimeters.

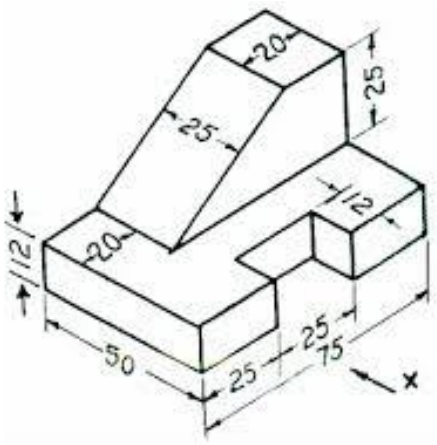

Fig: 1

Skill level 4	
4	
3	
2	
1	
0	
NR	

12. Construct a full-scale drawing of the spanner shown below, clearly indicating the centers of the arcs and points of tangency.

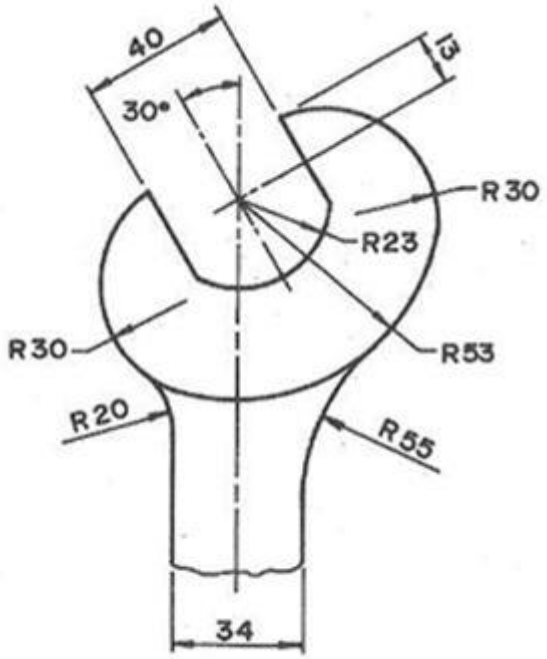

Skill level 4	
4	
3	
2	
1	
0	
NR	

MAJOR AREA 4: **FOOD TECHNOLOGY**

SECTION A:

QUESTION ONE: DESIGNING

Complete the missing stages in the Design Process.

DESIGNING

INVESTIGATING

- A. _____
  - *Clarify the problem*
  - *Note expectations about the solution*
  - *Explore issues about the problem*
- B. _____
- Identify the most likely idea

DEVISING

- C. _____
- D. _____
- E. _____
- Evaluate and document

MAKING

Produce the solution that can involve any 'making' activity e.g:

- F. _____
- Implement a decision
- Construct, establish, build etc.
- G. _____
- Evaluate and document

EVALUATING

- Think about the outcome
- H. _____
- I. _____
- To be improved or not.
- J. _____
- Document and prepare report.

Skill Level	A	B	C	D	E	F	G	H	I	J
1										
0										
NR										

QUESTION TWO: DESIGN UNDERSTANDING

Read the questions carefully and answer them correctly.

1. Define the term **design brief.**

Skill level 1	
1	
0	
NR	

2. You are asked whether designing and problem-solving are the same. Describe the reason for your answer.

Skill level 2	
2	
1	
0	
NR	

3. You have been asked to develop a design for a product that is required by your School Principal.
Outline the factors you would consider when preparing a research proposal.

Skill level 2	
2	
1	
0	
NR	

4. Describe the importance of **modifying a design** while the process is in progress.

Skill level 2	
2	
1	
0	
NR	

5. Distinguish any ***designing or constructing enterprises*** between the ***purpose*** of using ***large arrows*** and ***small arrows*** in the design process.

Skill level 3	
3	
2	
1	
0	
NR	

6. Every single person sees a design with different ideas and thoughts however, designers are the most different of all.
Explain the statement below in terms of designing/what the designer looks at when he/she looks at a design.

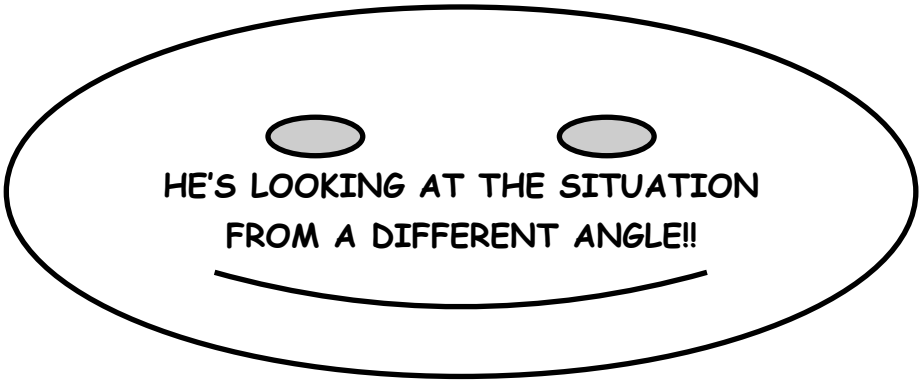

_____
_____
_____
_____
_____
_____
_____
_____
_____
_____

Skill level 3	
3	
2	
1	
0	
NR	

7. Designing is constantly wonderful when applying design principles and elements.
Rhythm *in design is the feeling of movement created by line, shape or colour.*
Design an **object** or a **product** using ***REPETITION*** for an interest of a client.

REPETITION

Skill level 3	
3	
2	
1	
0	
NR	

8. Study the pictures given below. Choose **ONE (1)** picture and answer the question that follow.

PICTURE A	**PICTURE B**
Source: https://pngimg.com/image/56132	***Source:*** https://anitalianinmykitchen.com/seafood-pasta/

Calculate the COST of the product shown in your chosen picture.

Chosen Picture: _____ (A or **B)**

Skill level 4	
4	
3	
2	
1	
0	
NR	

SECTION B: FOOD TECHNOLOGY QUESTIONS

QUESTION ONE: NUTRIENTS AND HEALTH

Read the questions carefully and answer them correctly.

Skill level 1	
1	
0	
NR	

1. Name the Macronutrient that we need for energy and body building.

_____

_____

2. Describe what happens if the epiglottis does not close over during swallowing in the digestive system.

Skill level 2	
2	
1	
0	
NR	

_____

_____

_____

_____

3. Making good choices of food is the foundation of good health.
Explain how poorly nourished children can have **"Dental carries and unhealthy gums".**

_____

_____

_____

_____

_____

_____

_____

_____

_____

_____

Skill level 3	
3	
2	
1	
0	
NR	

4. Explain the Digestion of Lipids in our body.

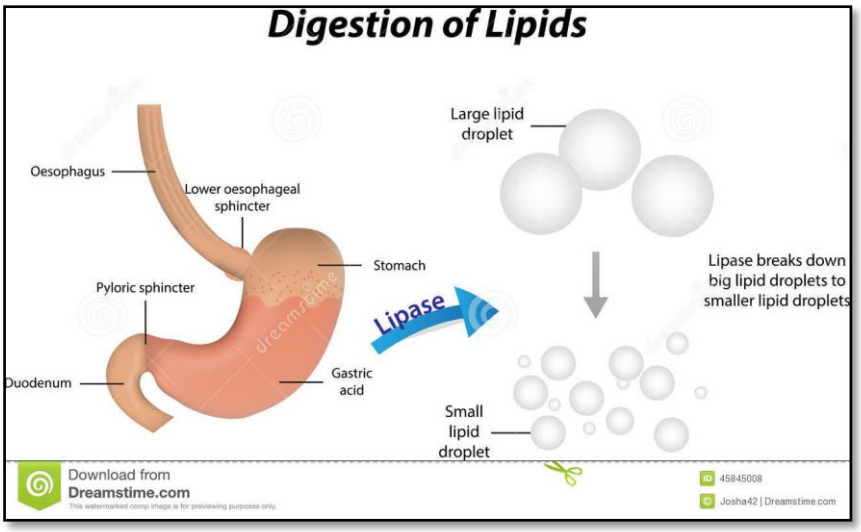

Skill level 3	
3	
2	
1	
0	
NR	

5. Explain the importance of **Indigestible Carbohydrates** in our body.

Skill level 3	
3	
2	
1	
0	
NR	

6. Diet and Nutritional status in Lactation is truly valuable.
Discuss the **Recommended Daily Intake (RDI)** for a lactating Mother.

Skill level 4	
4	
3	
2	
1	
0	
NR	

QUESTION TWO: FOOD SAFETY AND FOOD QUALITY

Read the questions carefully and answer them correctly.

Skill level 1	
1	
0	
NR	

1. Define **Foodborne Illness**.

_____

_____

Skill level 1	
1	
0	
NR	

2. State the factor that influences food spoilage.

_____

_____

3. Discuss **'Personal Hygienic Practices'** that you must have as a Chef at any Food Department.

_____

_____

_____

_____

_____

_____

_____

_____

_____

_____

_____

Skill level 3	
3	
2	
1	
0	
NR	

4. The Refrigerator has 'zones' of cold. One of the Facts about refrigeration is – ***"In the freezer compartment evaporation takes places and this causes cooling."***
Explain some more useful **facts** about Refrigeration.

_____

_____

_____

_____

_____

_____

_____

_____

_____

_____

_____

_____

Skill level 3	
3	
2	
1	
0	
NR	

5. Discuss the characteristics of a ‘good quality’ convenience food (s) that the chef should consider for the food product advertised below in the “A BIRD EYE VIEW” advertisement.

A BIRDS EYE VIEW OF MAKING ENDS MEET.

We’ve all got the problem. Balancing our diet and balancing our budget. That’s why most of us regard a really good piece of meat as strictly a week-end luxury.
But take the Birds Eye View and your perspective can change. We’ve created a top quality, man-sized meal at a price we can all afford seven days a week.
It’s called SteakHouse Grills.
Tender flakes of juicy beef – with no gristle. Just delicately seasoned to be equally tasty rare, medium or well done.
Now, we’re the first to admit it isn’t a traditional steak. But once you’ve tried it, we’re sure you will admit it’s a delicious alternative.
So, why not take the Birds Eye View? It always looks much nicer.
LOOKING OUT FOR YOU.

Skill level 4	
4	
3	
2	
1	
0	
NR	

QUESTION THREE: FOOD PLANNING AND PRODUCT DEVELOPMENT

Read the questions carefully and answer them correctly.

1. Identify the **"Accuracy of the Menu".**

_____

_____

_____

Skill level 1	
1	
0	
NR	

2. Define **Balanced Diet.**

_____

_____

_____

Skill level 1	
1	
0	
NR	

3. Planning a meal for babies is exceptionally significant. ***Breast milk has the ideal composition for a newborn baby's food***. Describe the significance of the first 3 days meal of babies.

_____

_____

_____

_____

_____

_____

Skill level 2	
2	
1	
0	
NR	

4. Describe a factor that influences Meal Planning.

_____

_____

_____

_____

_____

_____

Skill level 2	
2	
1	
0	
NR	

5. Explain the ways to develop this product to reach the quality standard that it is supposed to be.

Cracking Marble Cake

https://www.myweekendplan.com.my/common-cake-problems-and-why-they-happen/

Skill level 3	
3	
2	
1	
0	
NR	

6. Explain the safe food practices of handling and storing this **Potato Salad.**

Potato Salad

https://www.bing.com/images/potato salad - Search (bing.com)

Skill level 3	
3	
2	
1	
0	
NR	

MAJOR AREA 5: TEXTILE AND GARMENT CONSTRUCTION

QUESTION ONE: DESIGNING

Complete the missing stages in the Design Process.

DESIGNING

INVESTIGATING

- A. _____
  - *Clarify the problem*
  - *Note expectations about the solution*
  - *Explore issues about the problem*
- B. _____
- Identify the most likely idea

DEVISING

- C. _____
- D. _____
- E. _____
- Evaluate and document

MAKING

Produce the solution that can involve any 'making' activity e.g:

- F. _____
- Implement a decision
- Construct, establish, build etc.
- G. _____
- Evaluate and document

EVALUATING

- Think about the outcome
- H. _____
- I. _____
- To be improved or not.
- J. _____
- Document and prepare report.

Skill Level	A	B	C	D	E	F	G	H	I	J
1										
0										
NR										

QUESTION TWO: DESIGN UNDERSTANDING

Read the questions carefully and answer them correctly.

1. Define the term **design brief.**

_____

_____

_____

Skill level 1	
1	
0	
NR	

2. You are asked whether designing and problem-solving are the same. Describe the reason for your answer.

_____

_____

_____

_____

Skill level 2	
2	
1	
0	
NR	

3. You have been asked to develop a design for a product that is required by your School Principal.
Outline the factors you would consider when preparing a research proposal.

_____

_____

_____

_____

Skill level 2	
2	
1	
0	
NR	

4. Describe the importance of **modifying a design** while the process is in progress.

_____

_____

_____

_____

Skill level 2	
2	
1	
0	
NR	

5. Distinguish any ***designing or constructing enterprises*** between the ***purpose*** of using ***large arrows*** and ***small arrows*** in the design process.

_____

_____

_____

_____

_____

_____

_____

_____

_____

_____

_____

Skill level 3	
3	
2	
1	
0	
NR	

6. Every single person sees a design with different ideas and thoughts however, designers are the most different of all.
Explain the statement below in terms of designing/what the designer looks at when he/she looks at a design.

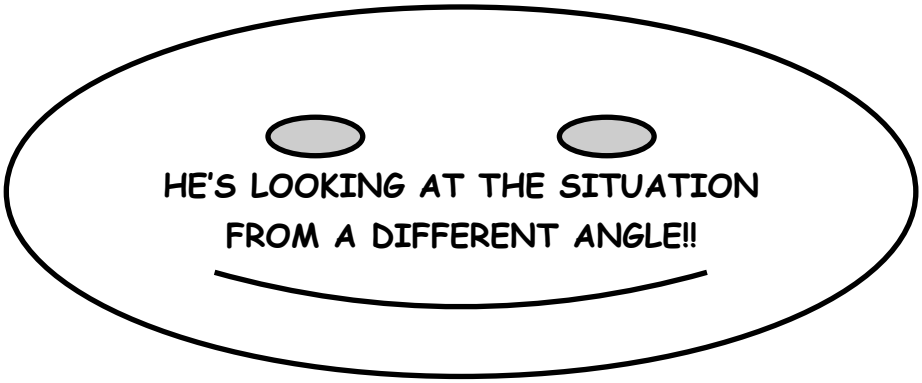

_____
_____
_____
_____
_____
_____
_____
_____
_____

Skill level 3	
3	
2	
1	
0	
NR	

7. Designing is constantly wonderful when applying design principles and elements.
Rhythm *in design is the feeling of movement created by line, shape or colour.*
Design an **object** or a **product** using ***REPETITION*** for an interest of a client.

REPETITION

Skill level 3	
3	
2	
1	
0	
NR	

8. Study the pictures given below. Choose **ONE (1)** picture and answer the question that follow.

PICTURE A	**PICTURE B**
Source: https://pngimg.com/image/56132	***Source:*** https://anitalianinmykitchen.com/seafood-pasta/

Calculate the **COST** of the product shown in your chosen pictures.
Chosen Picture: _____ (A or **B)**

Skill level 4	
4	
3	
2	
1	
0	
NR	

SECTION B: TEXTILE AND GARMENT CONSTRUCTION QUESTIONS

QUESTION ONE: Principles of Structural and Decorative Design.

Read the questions carefully and answer them correctly.

1. Identify the proper fabric to wear in the ***Winter Season***.

_____

_____

_____

Skill level 1	
1	
0	
NR	

2. Name the design element that is ranging colour from lightness to darkness in designing.

_____

_____

_____

Skill level 1	
1	
0	
NR	

3. Describe Symmetrical Balance when using in garment design.

_____

_____

_____

_____

_____

Skill level 2	
2	
1	
0	
NR	

4. Explain why it may be necessary to store woolen garments with mothballs.

_____

_____

_____

_____

_____

_____

_____

_____

_____

_____

_____

_____

_____

_____

Skill level 3	
3	
2	
1	
0	
NR	

5. Explain how design is used to emphasize this body feature.

"Slim Waistline"

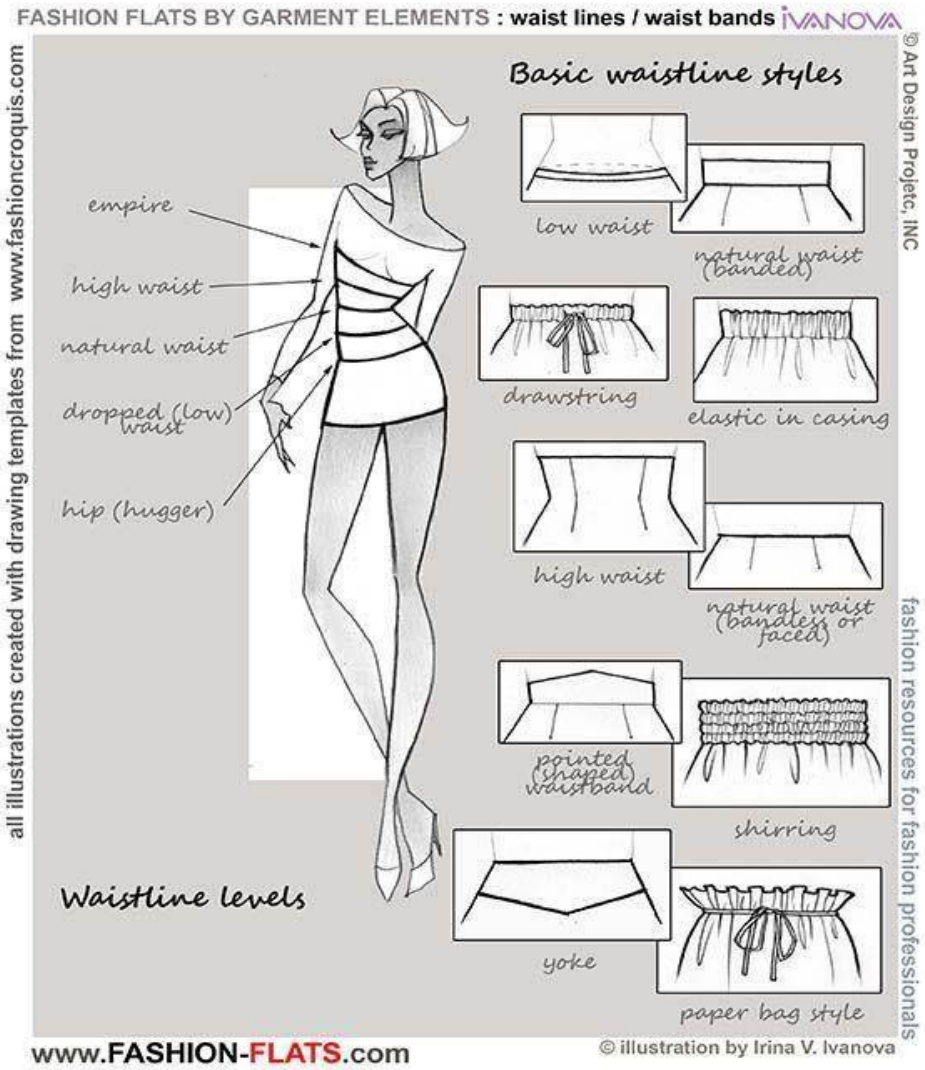

Skill level 3	
3	
2	
1	
0	
NR	

QUESTION TWO: Selection of Fabric and Construction Techniques

Read the questions carefully and answer them correctly.

1. Identify how to launder this garment.

Nylon Jacket for Men

forcesjackets.com

Skill level 1	
1	
0	
NR	

2. Name the type of button shown below.

Skill level 1	
1	
0	
NR	

3. Describe how to sew "Gathering Stitches" when tailoring.

Skill level 2	
2	
1	
0	
NR	

4. Compare the prices of Ready-made Sulu and Home-made Sulu.

Skill level 3	
3	
2	
1	
0	
NR	

5. Explain the purpose of "Dart" technique that is used on a garment.

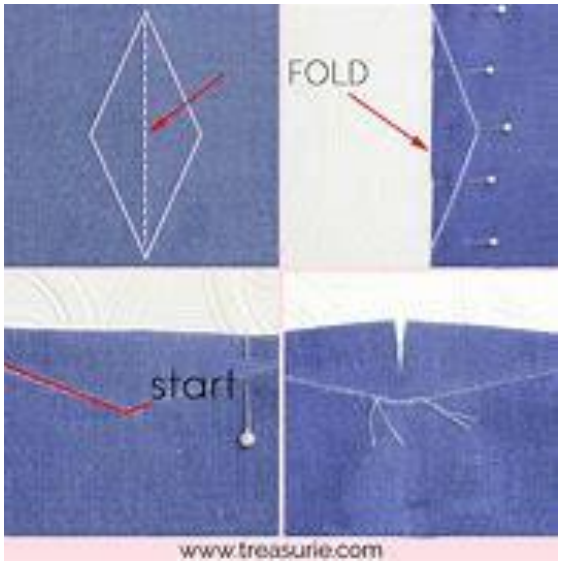

Skill level 3	
3	
2	
1	
0	
NR	

6. Evaluate in terms of the fabric selection and construction together with your own opinion the extract below.

Secondary School Boys in Tonga should no longer wear ta'ovala as in school uniform every day. This is because the Lou'akau [pandanus] cannot always cling together with the fabrics of both the shirt and sulu including the edging material of various school colours.

_____

_____

_____

_____

_____

_____

_____

_____

_____

_____

_____

_____

Skill level 4	
4	
3	
2	
1	
0	
NR	

QUESTION THREE: Sewing Machine

Read the questions carefully and answer them correctly.

1. State a good place for storing a Sewing Machine.

_____

_____

_____

Skill level 1	
1	
0	
NR	

2. Describe the function of "feed dog" in sewing.

_____

_____

_____

_____

_____

Skill level 2	
2	
1	
0	
NR	

3. Explain the importance of having an Over-locker when sewing.

_____

_____

_____

_____

_____

_____

_____

_____

_____

_____

_____

_____

_____

_____

Skill level 3	
3	
2	
1	
0	
NR	

4. A Sewing Kit is an advance pathway to being an experience tailor. Explain the advantages of owning a Sewing Kit as a beginner in sewing.

Skill level 3	
3	
2	
1	
0	
NR	

5. Explain the significance of the Instructional book of a brand-new sewing machine.

Skill level 3	
3	
2	
1	
0	
NR	

6. Justify the importance of knowing how to appropriately and competently use a sewing machine when making a garment to meet a client's needs and expectations in relation to the quotes below.

"NEVER UNDERESTIMATE THE POWER OF A WOMAN WITH A SEWING MACHINE THAT ALSO SATISIFIES THE PRINCIPLES AND ELEMENTS OF DESIGN NEEDED BY WEARER".

Skill level 4	
4	
3	
2	
1	
0	
NR	